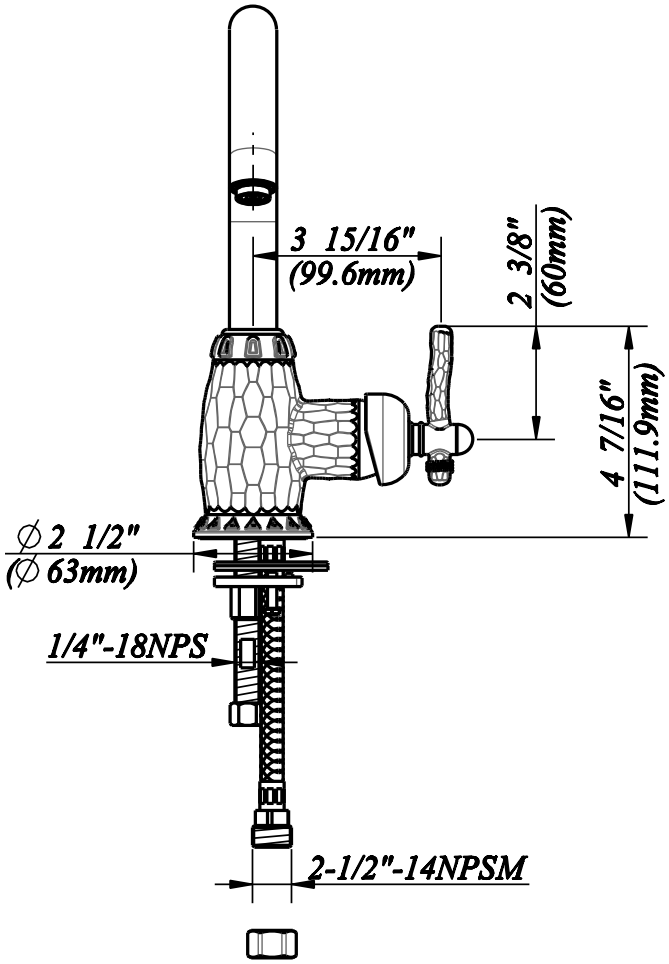

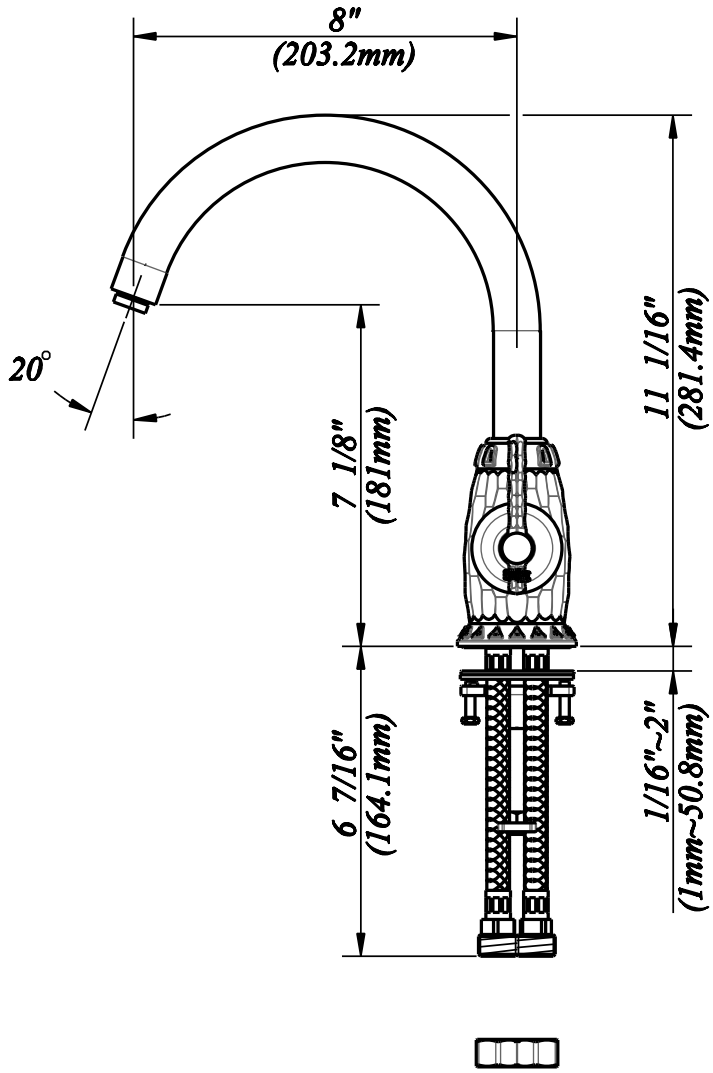

ZONE	DESCRIPTION	BY	DATE	APPROVE
	Ceramic disc valve cartridges as			
	standard providing flow rate of			
	(8.3LPM) max at 60psi			

REVISIONS

REVIEWED

CHECKED *Dan Kennard*

DESIGN *Dan Kennard* DATE

UNIT mm

FUSION HARDWARE GROUP.

TITLE: *Kitchen Faucet*

ITEM *BAT-KIT-XXX* REV A

SCALE | MATERIAL | SIZE A4 SHEET | OF |