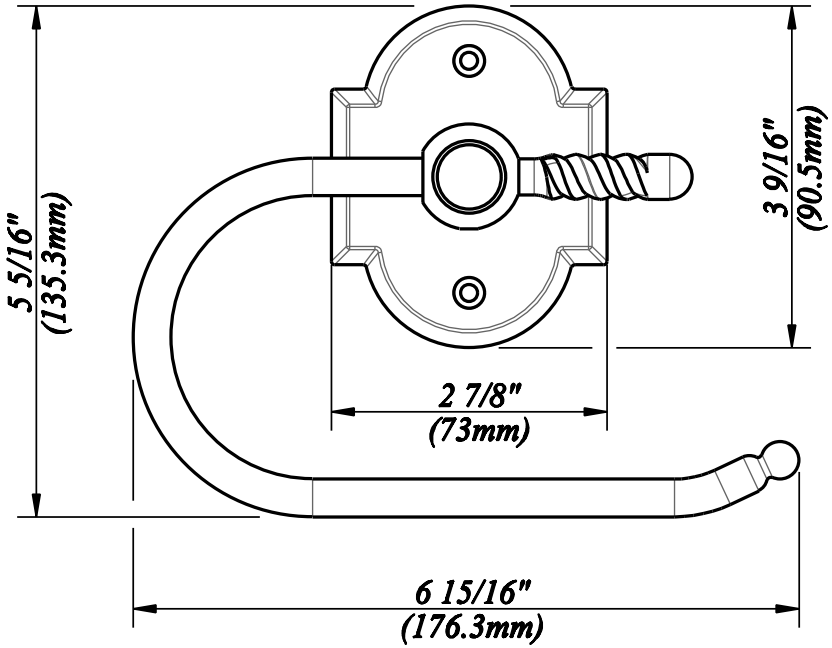

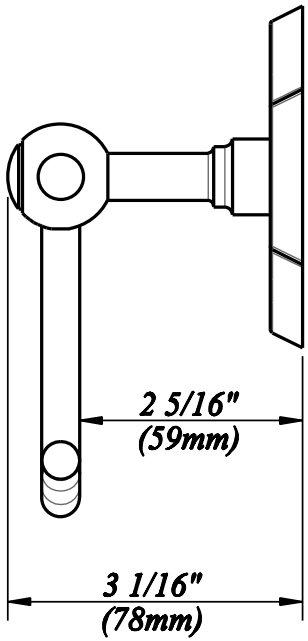

ZONE	DESCRIPTION	BY	DATE	APPROVE

REVISIONS

REVIEWED –

CHECKED

DESIGN DATE

Fusion Hardware Group Inc

UNIT mm

FUSION HARDWARE GROUP.

TITLE: *Blacksmith Forged Paper Holder*

ITEM *BSF-TPH-XXX(BBF30100)* REV A

SCALE 1:2 MATERIAL SIZE A4 SHEET OF 1