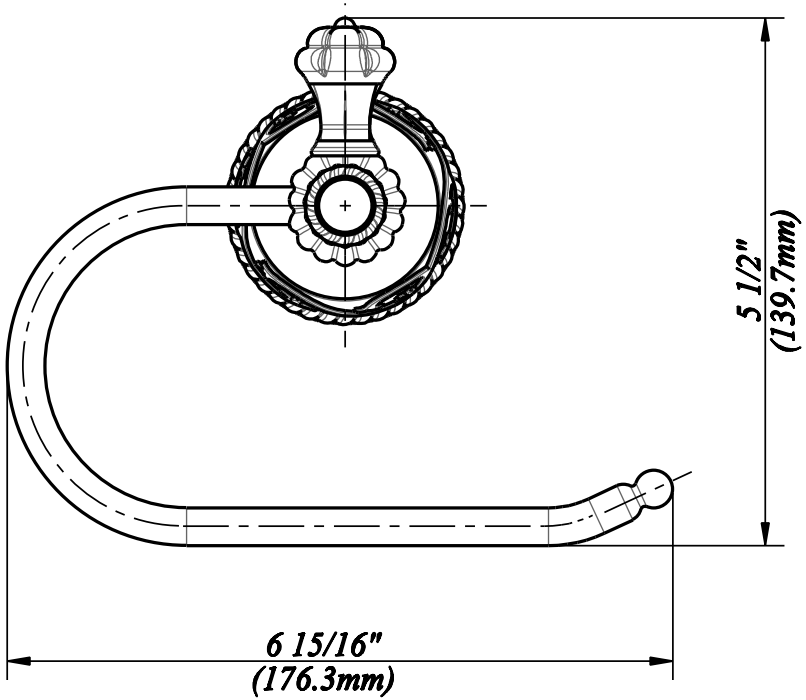

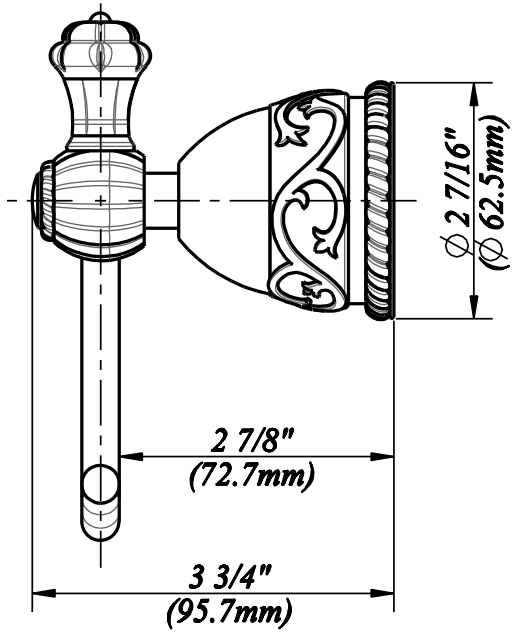

ZONE	DESCRIPTION	BY	DATE	APPROVE

REVISIONS

REVIEWED

CHECKED

DESIGN DATE

Fusion Hardware Group Inc.

UNIT mm

FUSION HARDWARE GROUP.

TITLE: Bella Villa Paper Holder

ITEM BEL-TPH-XXX(BVH30100)

REV

SCALE | MATERIAL | SIZE A4 SHEET | OF |